KZN SERIES

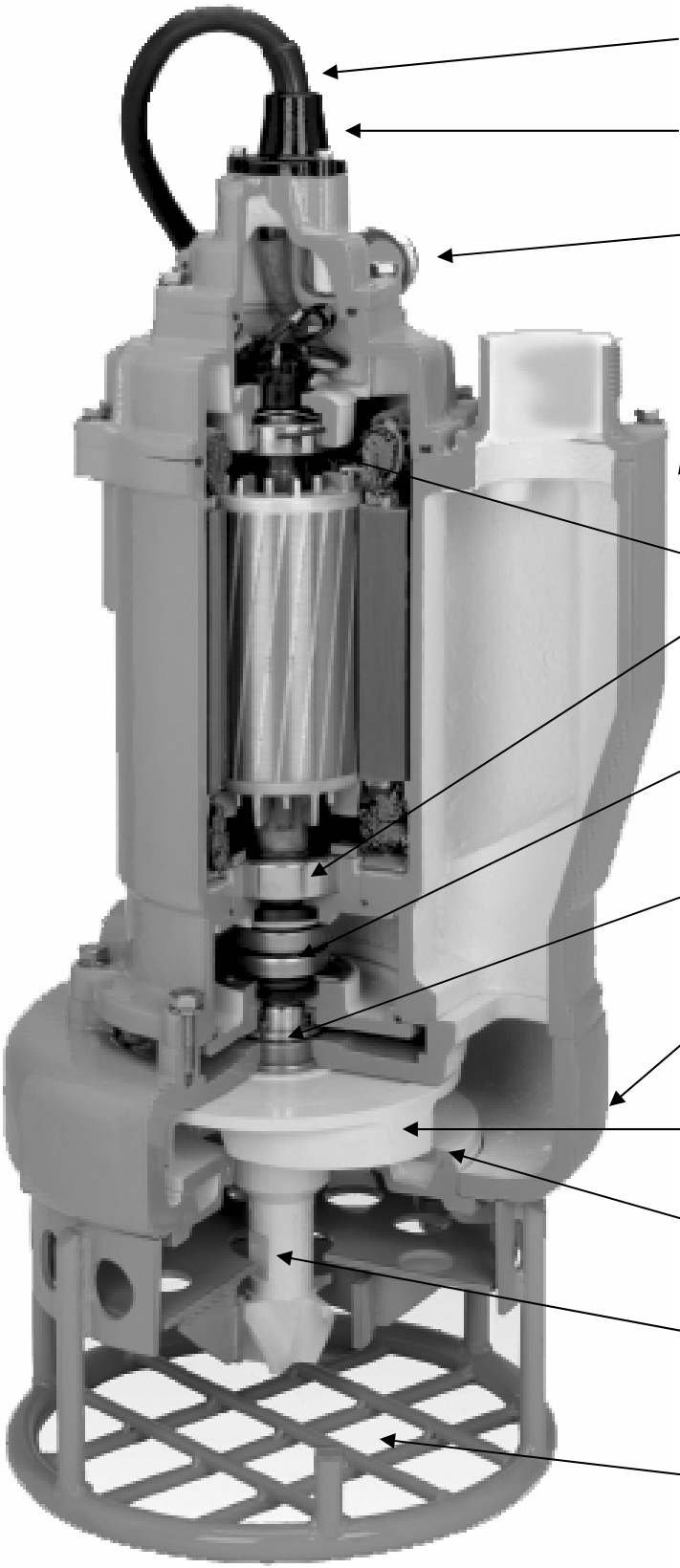

10M STANDARD POWER CORD
Custom lengths available

POWER CORD GLANDS
Individual potted leads to prevent wicking

LIFTING RINGS
To easily lift and transport the pump

HARDENED DUCTILE TOP DISCHARGE MOTOR HOUSING
Twice as abrasion resistant as regular ductile iron. Top discharge allows for superior cooling of motor & allows for a slim line design.

HEAVY DUTY BALL BEARINGS
Permanently Lubricated, carries the load of the rotor.

DUAL MECHANICAL SEAL (SIC X 2)
Abrasion resistant Silicon Carbide Seals in separate oil chamber to protect the motor.

SHAFT SLEEVE
Easily replaceable – saves on shaft wear

HARDENED DUCTILE IRON VOLUTE
Twice as abrasion resistant as regular ductile iron.

CHROME IRON IMPELLER
Can handle abrasive solid concentrations as high as70% by weight.

CHROME IRON WEAR PLATE
Replaceable wear plate to reduce the loss of pump performance

CHROME IRON AGITATOR
To break up softer solids & put them in suspension

LARGE OPEN STRAINER
Protects the pump from larger solids that are too large for the pump