POMPDIRECT

www.grindexpompen.nl

Revision 1.0

grindex

www.grindex.com

Parts List

8124.590 Mega

POMPDIRECT

T 0294-457712
info@pompdirect.nl

Bloemendalerweg 14
1382 KC Weesp

Table of Contents

Introduction **2**
Specially approved products 2

Product Description **3**
The data plate 3

Exploded Views **4**
Drive unit 4
Support bearing, labels and mechanical seals 5
Connection housing and cable entry 6
N 8
H 9
Stand 10

Spare Parts **11**
List of parts 11

Tel. 0294-457712 info@pompdirect.nl www.grindexpompen.nl

Introduction

Purpose of this manual

The purpose of this manual is to provide necessary information on spare parts and accessories order.

Disclaimer

Always use genuine Grindex parts. The use of other spare parts or accessories can invalidate any claims for warranty or compensation. Grindex does not take any responsibility for damages that are caused by the use of non-original parts. For more information, contact your local sales and service representative.

Data for ordering spare parts

The following information is needed for spare part orders:

- Serial number of the product
- Part number
- Quantity of bulk material, see * in tables

Specially approved products

Qualification of personnel

Only Grindex or Grindex-authorized service personnel may undertake repair work on Ex-approved products.

Dimensional accuracy inspection

Spare parts marked with (Ex) after the part number are subject to dimensional accuracy inspection.

Tel. 0294-457712 info@pompdirect.nl www.grindexpompen.nl

Product Description

Products included

Pump model	Standard	EX	MSHA	Drainage	Sludge
Mega 8124.590		X			X

The data plate

Introduction

The data plate is a metal label located on the main body of the pump. The data plate lists key product specifications.

The data plate

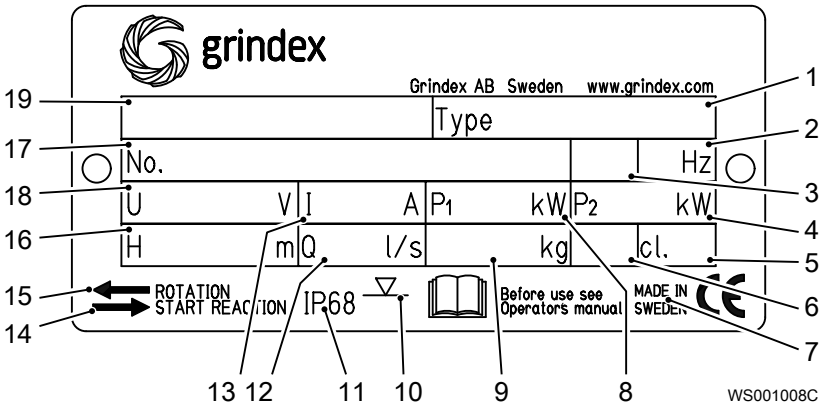

1. Pump type number
2. Frequency
3. Phases, type of current
4. Rated shaft power
5. Thermal class
6. Locked rotor code-letter
7. Country of origin
8. Maximum power consumption
9. Product weight
10. Maximum submersion depth
11. Degree of protection
12. Maximum capacity
13. Rated current
14. Direction of the start reaction
15. Direction of the impeller rotation
16. Maximum head
17. Serial number
18. Rated voltage
19. Pump model

Product approvals for hazardous locations

Pump model	Approvals
Mega 8124.590	IEC • IECEx scheme • IEC 60079-0, IEC 60079-1 • Ex d I • Ex d IIB T4

Tel. 0294-457712 info@pompdirect.nl www.grindexpompen.nl

Exploded Views

Drive unit

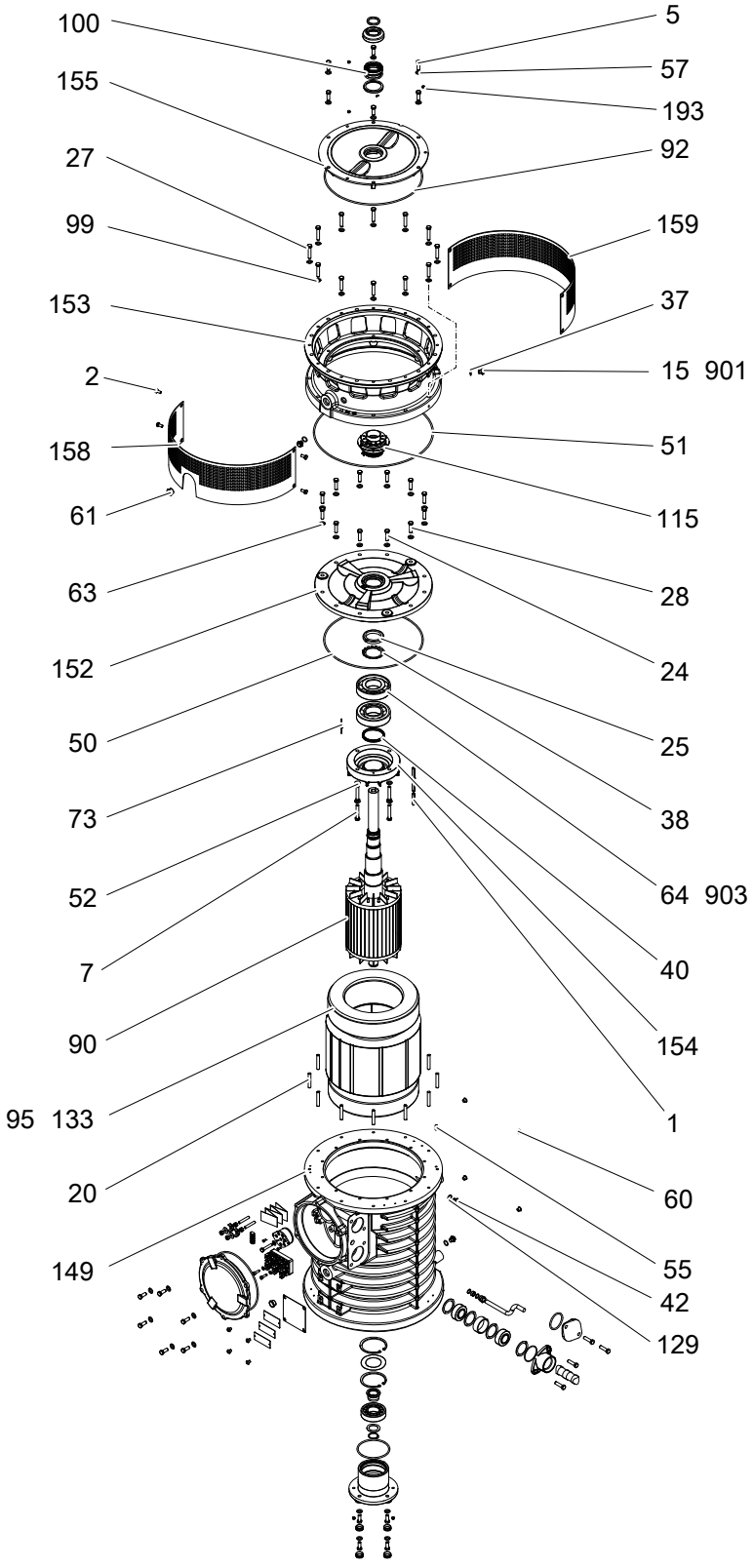

Tel. 0294-457712 info@pompdirect.nl www.grindexpompen.nl

Support bearing, labels and mechanical seals

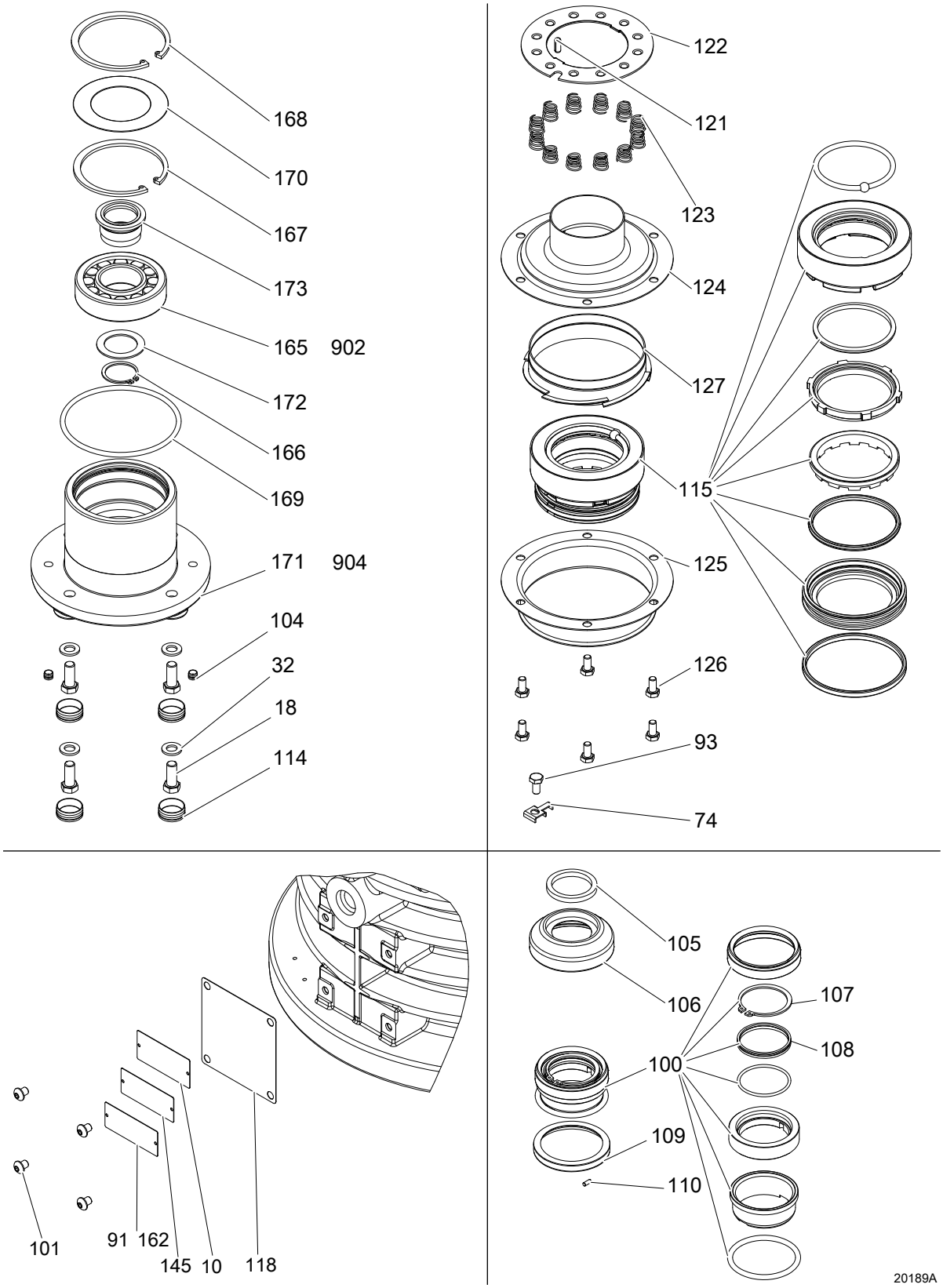

Tel. 0294-457712 info@pompdirect.nl www.grindexpompen.nl

Connection housing and cable entry

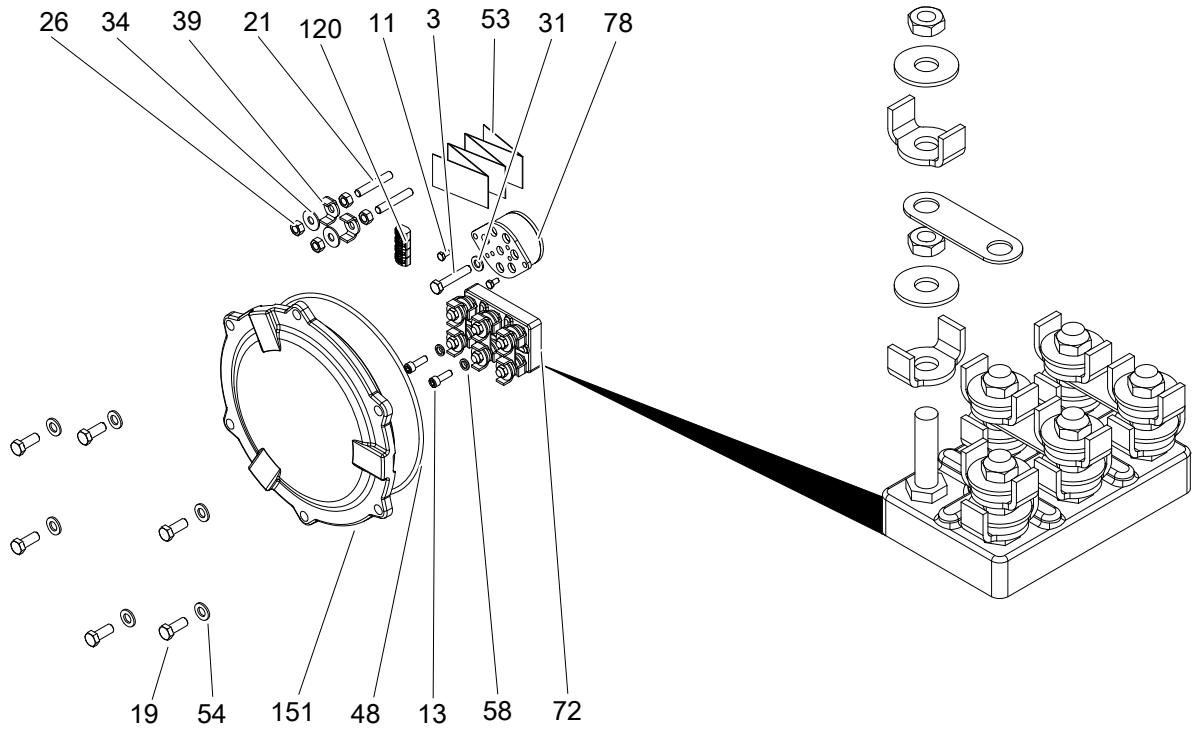

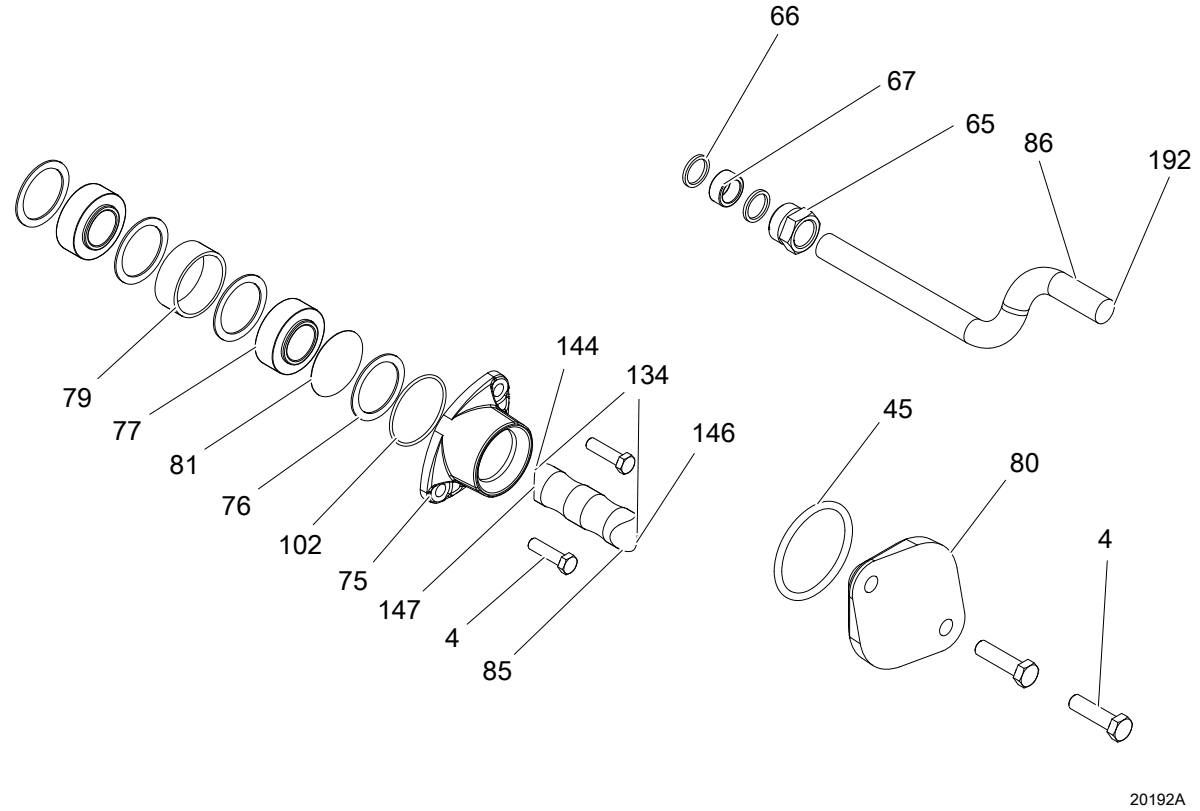

Figure 1: Standard

Tel. 0294-457712 info@pompdirect.nl www.grindexpompen.nl

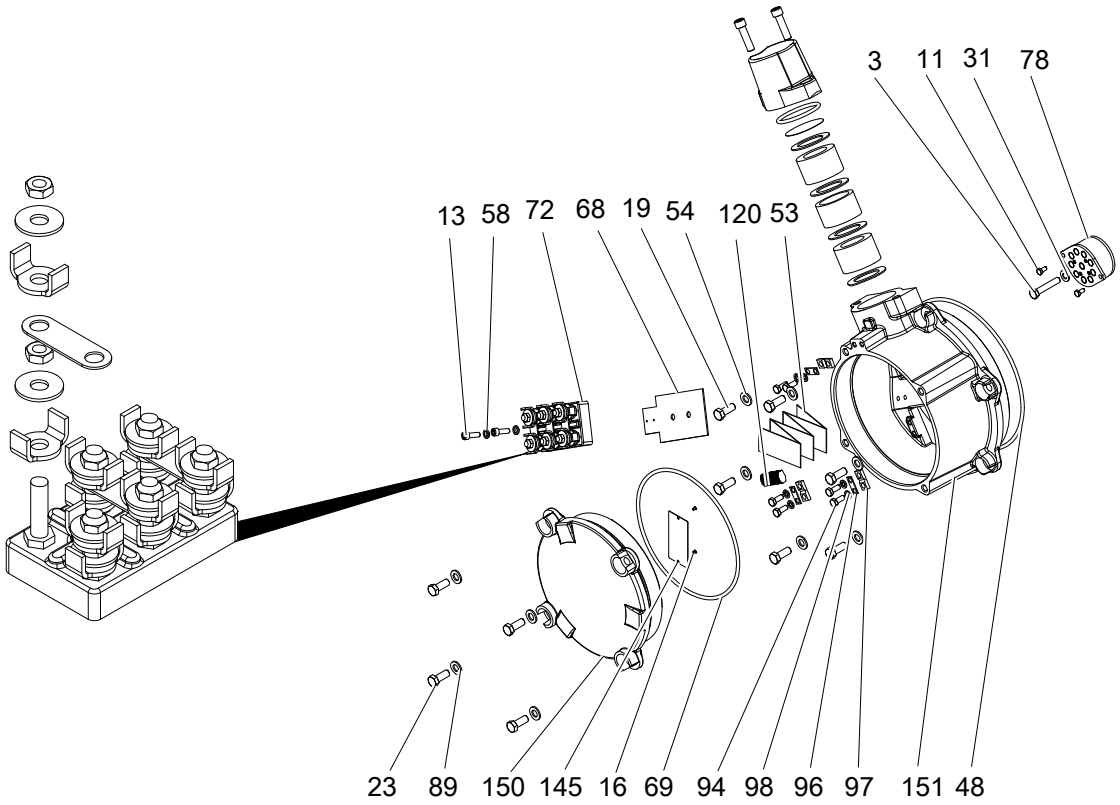

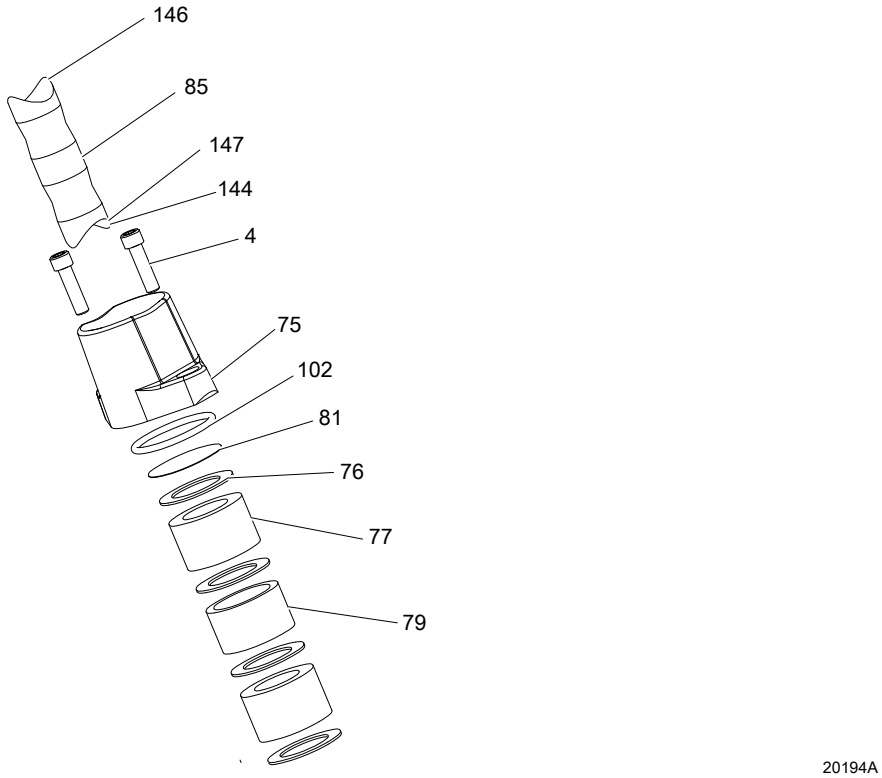

Figure 2: IEC

Tel. 0294-457712 info@pompdirect.nl www.grindexpompen.nl

N

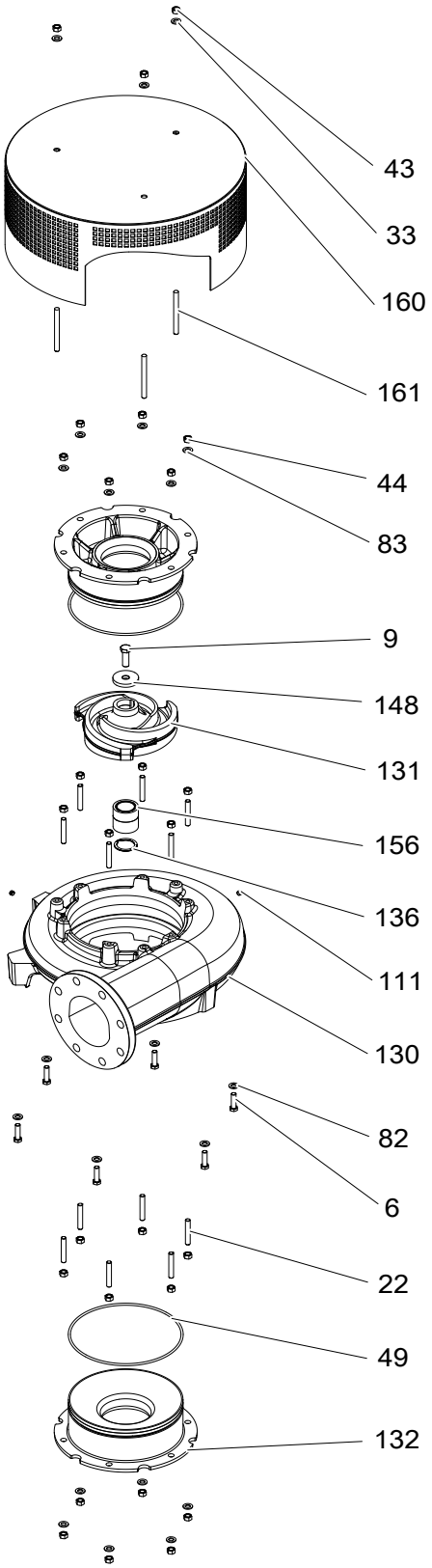

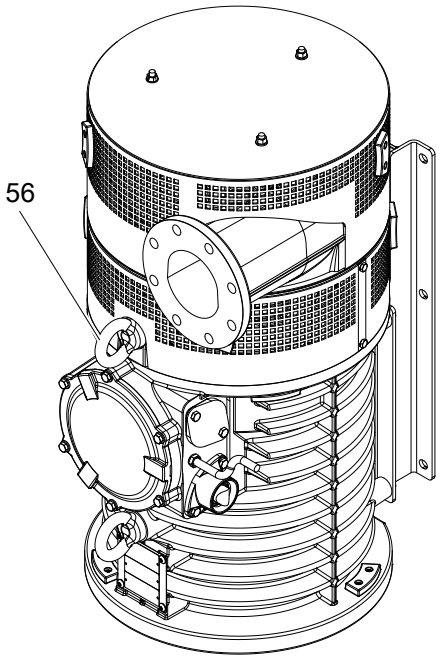

20191A

Tel. 0294-457712 info@pompdirect.nl www.grindexpompen.nl

H

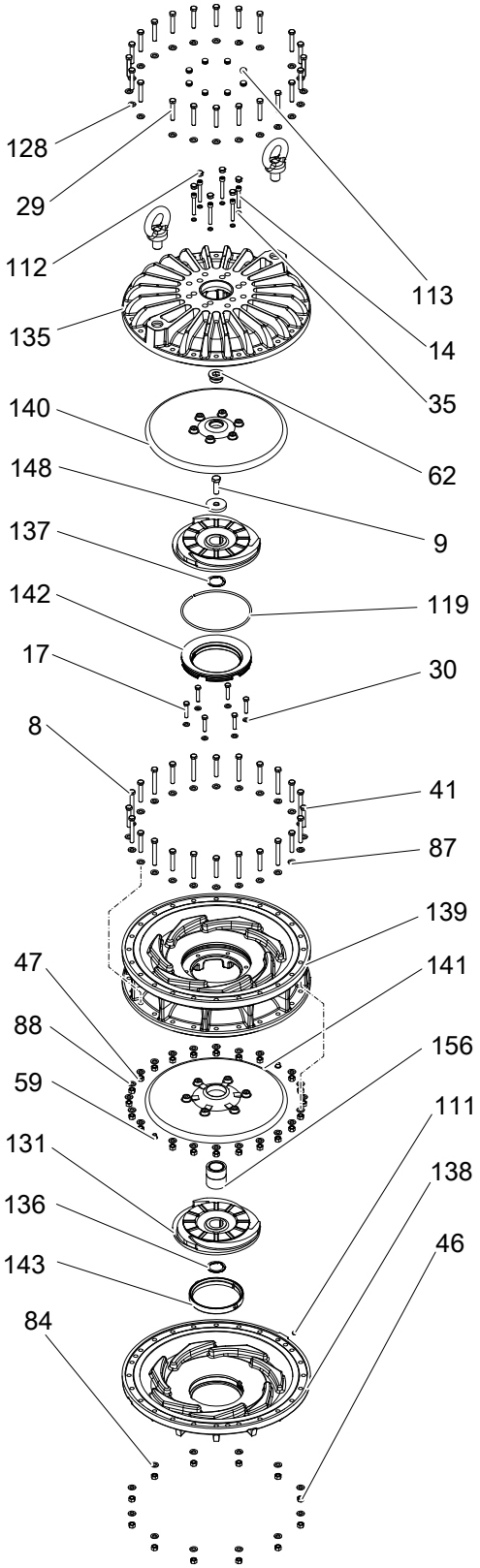

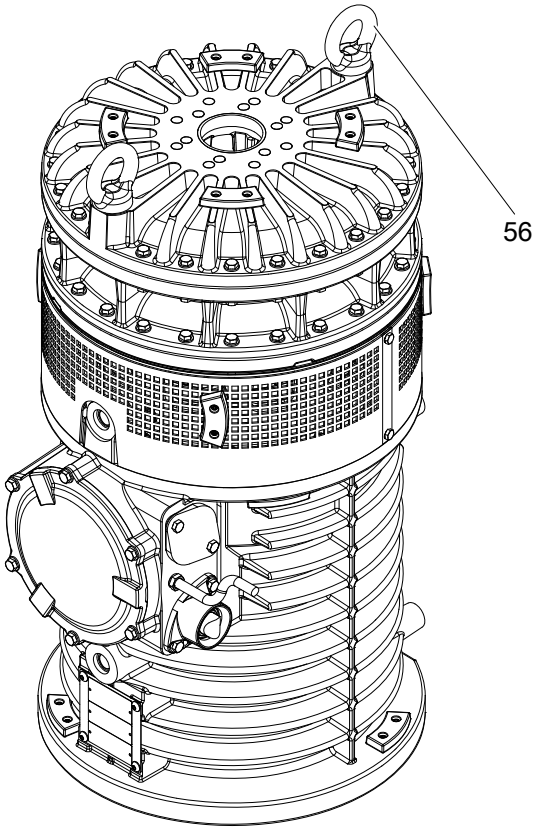

20190A

Tel. 0294-457712 info@pompdirect.nl www.grindexpompen.nl

Stand

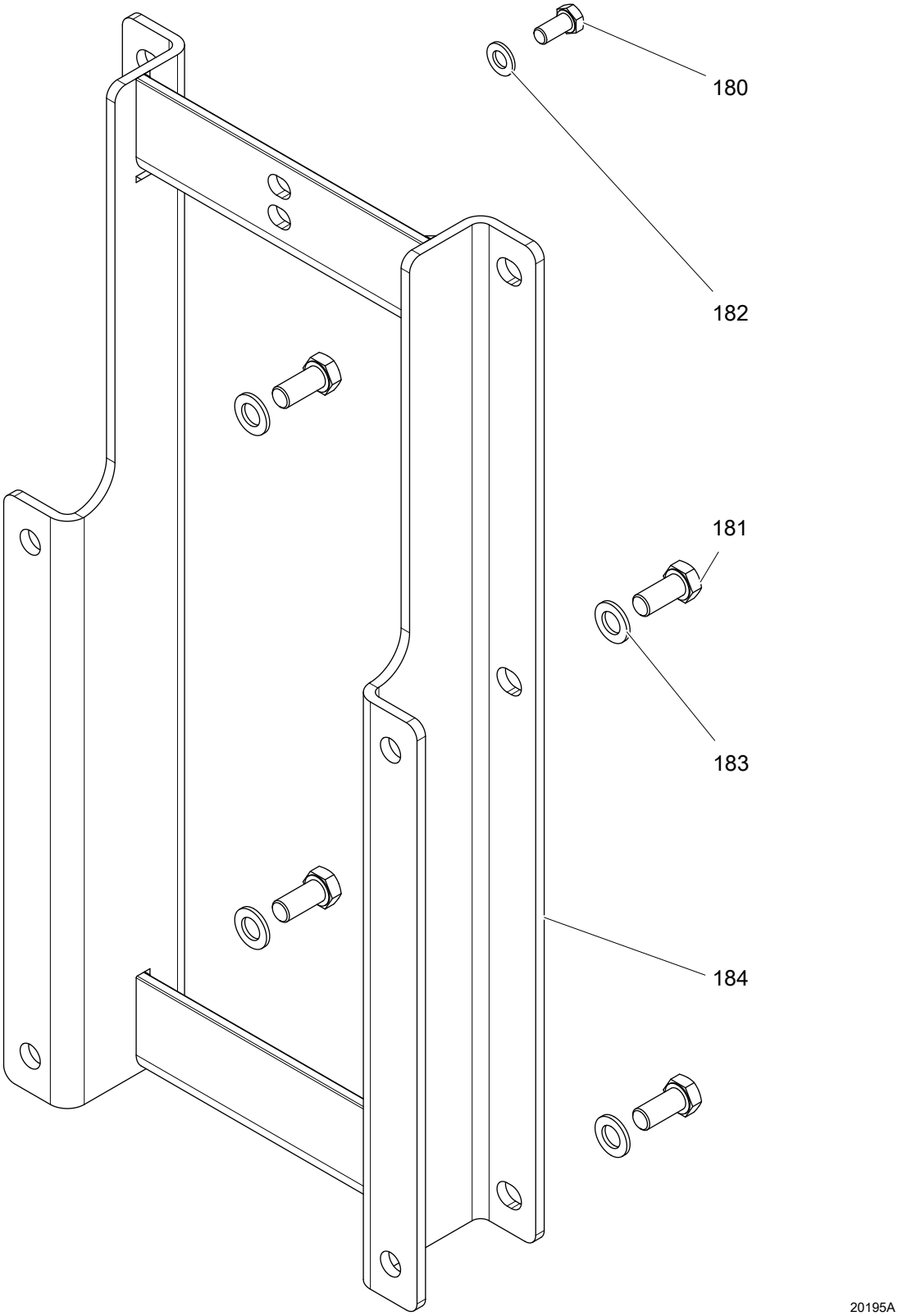

Tel. 0294-457712 info@pompdirect.nl www.grindexpompen.nl

Spare Parts

List of parts

Pos. No	Part. No	Type	Denomination	Qty/Version 590
1	410 193		Parallel key 12X8X63-A4	2
2	410 195		Hexagon head screw M10X20-A4-70	4
3	410 196		Hexagon head screw M10X55-A2-70	1
4	410 536		Hex.socket hd screw M12X45-A2-70	2
5	410 197		Hexagon head screw M12X35-A2-70	6
6	132 260		Hexagon head screw M12X45-A2-70	6
7	410 198		Hexagon head screw M12X70-A2-70	4
8	410 199		Hexagon head screw M12X90-A2-70	12
9	410 200		Hexagon head screw M16X50-A4-70	1
10	51 633 00	(Ex)	Data plate	1
11	50 020 20		Hexagon head screw M6X12-A4-70	2
13	50 021 00		Hex.socket hd screw M8X25-A2-70	2
14	410 205		Hex.socket hd screw M10X70-A2-70	6
15	133 063		Inspection screw	2
17	410 196		Hexagon head screw M10X55-A2-70	6
18	132 407		Hexagon head screw M12X30-A2-70	4
19	132 407		Hexagon head screw M12X30-A2-70	6
22	132 442		Stud M12X80-A2-70	12
23	132 407		Hexagon head screw M12X30-A2-70	4
24	132 407		Hexagon head screw M12X30-A2-70	3
25	410 207		Round nut M70X2	1
27	410 532		Hexagon head screw M12X60-A2-70	12

Tel. 0294-457712 info@pompdirect.nl www.grindexpompen.nl

Pos. No	Part. No	Type	Denomination	Qty/Version 590
28	132 260		Hexagon head screw M12X45-A2-70	9
29	410 198		Hexagon head screw M12X70-A2-70	22
30	50 022 26		Plain washer 10-A4-170HV	6
32	132 274		Plain washer 12-A2-170	4
33	132 274		Plain washer 12-A2-170	3
35	410 544		Lock washer	6
37	133 064		O-ring 19.2X3 NBR	2
38	410 229		Lock washer	1
40	410 251		Seal ring	1
41	410 198		Hexagon head screw M12X70-A2-70	12
43	132 280		Hexagon nut M12-A2-70	3
44	132 280		Hexagon nut M12-A2-70	24
46	132 280		Hexagon nut M12-A2-70	12
47	132 280		Hexagon nut M12-A2-70	22
48	410 240		O-ring 269.3X5.7 NBR	1
49	50 037 32		O-ring 279.3X5.7 NBR	2
50	410 241		O-ring 419.3X5.7 NBR	1
51	410 242		O-ring 499.3X5.7 NBR	1
52	132 274		Plain washer 12-A2-170	4
53	51 675 01		Connection plate	1
54	132 274		Plain washer 12-A2-170	6
55	410 191		Grooved pin	1
56	410 209		Lifting eye bolt	2
57	132 274		Plain washer 12-A2-170	6
58	410 252		Sealing washer	2
59	410 234		Protective plug	2
60	410 234		Protective plug	4
61	410 235		Protective plug	2
62	410 236		Plug	1
63	132 274		Plain washer 12-A2-170	12
64	410 250		Ball bearing	2
68	51 832 00		Insulating plate	1
69	130 947		O-ring 229.3X5.7 NBR	1
72	51 201 00		Terminal board unit	1
72,1	410 208		Hexagon nut	12
72,2	410 211		Plain washer 10.5X28X2	12

Tel. 0294-457712 info@pompdirect.nl www.grindexpompen.nl

Pos. No	Part. No	Type	Denomination		Qty/Version 590
72,3	410 245		Cable washer		12
72,4	410 247		Closing link		3
72,5	410 248		Connection term boar		1
73	51 255 00		Detector unit		1
74	51 264 00		Lock washer		1
75	51 791 00	(Ex)	Entrance flange		1
76	410 215		Plain washer 35.5X70X2-A2-70	Cable entry (30)-34mm Cable entry (26)-30mm	4
76	410 219		Plain washer 43.5X70X2-A2-70	Cable entry (38)-42mm Cable entry (40)-46mm	4
76	410 220		Plain washer 46.5X70X2-A2-70	Cable entry (40)-46mm	4
76	410 221		Plain washer 48.5X70X2-A2-70	Cable entry (46)-48mm Cable entry (40)-46mm	4
77	410 928		Seal sleeve	Cable entry (26)-30mm	2
77	410 929		Seal sleeve	Cable entry (26)-30mm	2
77	410 930		Seal sleeve	Cable entry (30)-34mm	2
77	410 931		Seal sleeve	Cable entry (30)-34mm	2
77	410 932		Seal sleeve	Cable entry (38)-42mm	2
77	410 933		Seal sleeve	Cable entry (38)-42mm Cable entry (40)-46mm	2
77	410 934		Seal sleeve	Cable entry (40)-46mm	2
77	410 935		Seal sleeve	Cable entry (40)-46mm	2
77	410 936		Seal sleeve	Cable entry (46)-48mm	2
78	51 200 00		El-lead through	6-leads 50 Hz 2-poles 500V-550V D P2=90kW 6-leads 60 Hz 2-poles 575V-600V D P2=104kW/140hp 6-leads 60 Hz 2-poles 380V D P2=104kW/ 140hp 6-leads 50 Hz 2-poles 380V-400V D 660V-690V Y P2=90kW 6-leads 60 Hz 2-poles 440V-460V D P2=104kW/140hp 6-leads 60 Hz 2-poles 575V D P2=104kW/ 140hp 6-leads 50 Hz 2-poles 400V-440V D P2=90kW	1
78	51 250 00		El-lead through	12-leads 50 Hz 2-poles 500V Y// 1000V YSER P2=90kW	1

Tel. 0294-457712 info@pompdirect.nl www.grindexpompen.nl

Pos. No	Part. No	Type	Denomination		Qty/Version 590
79	51 792 00		Ring		1
82	132 274		Plain washer 12-A2-170		6
83	132 274		Plain washer 12-A2-170		12
84	132 274		Plain washer 12-A2-170		12
85	410 866		Motor cable subcab S3X50+3X25/3+S(4X0.5)		*
87	132 274		Plain washer 12-A2-170		24
88	132 274		Plain washer 12-A2-170		22
89	132 274		Plain washer 12-A2-170		4
90	51 219 01		Shaft unit		1
92	410 241		O-ring 419.3X5.7 NBR		1
93	50 020 20		Hexagon head screw M6X12-A4-70		1
94	132 288		Hexagon head screw M8X20-A2-70		6
95	51 262 00		Stator 42-26-2f	6-leads 60 Hz 2-poles 380V D P2=104kW/ 140hp	1
95	51 262 01		Stator 42-26-2f	6-leads 50 Hz 2-poles 380V-400V D 660V-690V Y P2=90kW 6-leads 60 Hz 2-poles 440V-460V D P2=104kW/140hp	1
95	51 262 03		Stator 42-26-2f	6-leads 50 Hz 2-poles 400V-440V D P2=90kW	1
95	51 262 04		Stator 42-26-2f	6-leads 60 Hz 2-poles 575V D P2=104kW/ 140hp	1
95	51 262 05		Stator 42-26-2f	6-leads 50 Hz 2-poles 500V-550V D P2=90kW 6-leads 60 Hz 2-poles 575V-600V D P2=104kW/140hp	1
95	51 262 07		Stator 42-26-2f	12-leads 50 Hz 2-poles 500V Y// 1000V YSER P2=90kW	1
96	132 347		Earthing plate FM/PTB		3
97	51 340 00		Earthing plate		3
98	410 479		Spring washer DIN 128-A-8-A2		6
99	132 274		Plain washer 12-A2-170		12
100	51 232 01		Mechanical seal		1
101	410 206		Hex.socket hd screw M10X12-A2-70		4

Tel. 0294-457712 info@pompdirect.nl www.grindexpompen.nl

Pos. No	Part. No	Type	Denomination		Qty/Version 590
102	410 238		O-ring 69.2X5.7 NBR		1
104	410 937		Plug		2
105	51 263 00		Plain washer		1
106	51 245 00		Protective casing NBR		1
109	51 229 00		Wear protection		1
110	410 189		Parallel pin CP-H8-4X10-1650		1
111	410 937		Plug		1–2
112	410 939		Protective plug M20		6
113	410 939		Protective plug M20		8
113	410 940		Protective plug M20		8
114	410 942		Protective plug M33		4
115	50 395 02		Mechanical seal		1
118	51 272 00		Plate		1
119	51 833 00		Spring ring, solid		1
120	410 916		Terminal block		4
121	410 192		Tension pin		1
122	51 223 00		Washer		1
123	50 368 00		Compression spring		12
124	51 222 00		Flange compl.		1
125	51 227 00		Flange		1
126	50 020 20		Hexagon head screw M6X12-A4-70		6
127	51 224 00		Impeller unit		1
128	132 274		Plain washer 12-A2-170		22
130	51 209 00		Pump housing		1
130	51 209 01		Pump housing	Drilled acc. to: EN 1092-2 tab. 9 ASME B 16.5-1996;tab.8	1
131	51 239 06		Impeller	N50Hz Mtrl. Alloyed white iron (hardened, high chrome)	1
131	51 239 07		Impeller	N 60Hz Mtrl. Alloyed white iron (hardened, high chrome)	1
131	51 645 00		Impeller	H 50Hz Mtrl. Alloyed white iron (hardened, high chrome)	2
131	51 645 10		Impeller	H 60Hz Mtrl. Alloyed white iron (hardened, high chrome)	2
132	51 225 00		Suction cover NBR		2

Tel. 0294-457712 info@pompdirect.nl www.grindexpompen.nl

Pos. No	Part. No	Type	Denomination		Qty/Version 590
133	50 221 07		End sleeve 25 MM2; L=15 MM	6-leads 60 Hz 2-poles 380V D P2=104kW/ 140hp	6
133	50 221 06		End sleeve 16 MM2; L=12 MM	12-leads 50 Hz 2-poles 500V Y// 1000V YSER P2=90kW	9
135	51 243 00		Diffuser coat. NBR		1
135	51 243 01		Diffuser coat. NBR	Drilled acc. to: EN 1092-2 tab. 11	1
135	51 243 02		Diffuser coat. NBR	Drilled acc. to: ASME B 16.5-1996;tab.11	1
136	50 174 04		Adjusting washer 0.5 MM		2
136	50 174 03		Washer 0.3 MM		3
136	50 174 04		Adjusting washer 0.5 MM	N	5
137	50 174 03		Washer 0.3 MM	H	2
137	50 174 04		Adjusting washer 0.5 MM	H	2
138	51 220 00		Diffuser coat. NBR		1
139	51 738 00		Diffuser coat. NBR		1
140	51 246 00		Diffuser disc coated NBR		1
141	51 247 00		Diffuser disc coated NBR		1
142	51 242 05		Wear ring NBR		1
143	51 221 00		Wear ring NBR		1
144	-		Cap 11X25 PVC		1
145	51 613 01	(Ex)	Certificate plate		1
146	-		Cap 35X45 PVC		1
147	410 943		Cable lug		1
148	51 213 00		Plain washer		1
149	-	(Ex)	Stator housing		1
150	51 793 00	(Ex)	Cover		1
151	51 788 00	(Ex)	Connection housing		1
152	51 216 01	(Ex)	Bearing housing		1
153	51 273 00		Oil housing		1
154	51 217 01	(Ex)	Bearing cover		1
155	51 218 00		Diffuser coat. NBR		1
156	51 260 00		Sleeve compl.		1
158	51 274 00		Strainer unit		1
159	51 275 00		Strainer unit		1
160	51 211 00		Strainer compl.		1
161	51 203 00		Stud		3
162	50 898 00		Marking tape		1
165	410 225		Roller bearing		1

Tel. 0294-457712 info@pompdirect.nl www.grindexpompen.nl

Pos. No	Part. No	Type	Denomination	Qty/Version
				590
166	410 081		Retaining ring SGA 40	1
167	130 995		Retaining ring SGH 110	1
168	410 231		Retaining ring SGH 115	1
169	410 239		O-ring 134.3X5.7 NBR	1
170	51 253 00		Washer	1
171	51 254 01	(Ex)	Bearing housing	1
172	51 256 00		Washer	1
173	51 257 00		Sleeve	1
193	410 937		Plug	3
800	51 192 02		O-ring kit	1
800,37	133 064		O-ring 19.2X3 NBR	2
800,45	410 238		O-ring 69.2X5.7 NBR	1
800,48	410 240		O-ring 269.3X5.7 NBR	1
800,49	50 037 32		O-ring 279.3X5.7 NBR	2
800,50	410 241		O-ring 419.3X5.7 NBR	1
800,51	410 242		O-ring 499.3X5.7 NBR	1
800,69	130 947		O-ring 229.3X5.7 NBR	1
800,92	410 241		O-ring 419.3X5.7 NBR	1
800,102	410 238		O-ring 69.2X5.7 NBR	1
800,102	410 562		O-ring 69.5X3 NBR	2
800,129	133 064		O-ring 19.2X3 NBR	2
800,169	410 239		O-ring 134.3X5.7 NBR	1
900	51 265 00		Basic repair kit	1
901	410 053		Oil ISO VG 32	*
902	-		Grease	*
903	-		Grease	*
904	-		Grease	*

Tel. 0294-457712 info@pompdirect.nl www.grindexpompen.nl